Work Order ID 108386

October-17-13 1:23:31 PM

108386

Item ID: D3562-042 **Accept** *N900040100* **Setup Start** *NS1*

Revision ID: **Stop** *NS2*

Item Name: Step Weldment

Start Date: 10/17/13 **Start Qty:** 2.00 *2*

Required Date: 10/17/13 **Req'd Qty:** 2.00 *2*

Reference:

Cust Item ID:

Customer:

Run Start *NR1*

Stop *NR2*

Approvals: **Process Plan:** MLJ **Date:** 13-10-22 **Tooling:** _____ **Date:** _____

QC: _____ **Date:** _____ **SPC (Y/N):** _____ **Date:** _____

Sequence ID/ Work Center ID	Operation Description	Set Up/ Run Hours	Tool ID	Tool #	Plan Code	Accept Qty	Reject Qty	Reject Number	Insp. Stamp
Draw Nbr	**Revision Nbr**								
D3562	F								
100		0.00							
100	Large Fab					2	ϕ		13.11.27
Large Fab	**Memo**	0.00							
Large Fab	1-Cut D2622 extrusion as per Dwg D3562 2-Deburr and bevel ends for welding								
110	QC6- Inspect dimensions to drawing	0.00	DAS 24 9-89						13.11.27
110						2			
QC	**Memo**	0.00							
Quality Control									
120	Chemical Conversion Coat per QSI005 4.1	0.00							
120						2		13.12.30	
HandFinish	**Memo**	0.00							
Hand Finishing									

DQA: _____ Date: _____

NCR: Yes / No

WORK ORDER NON-CONFORMANCE / UPDATE

QA Closed: Date:

Work Order: _____

Part No. _____

NCR No. _____

DISPOSITION

Rework ☐
Scrap ☐
Use-as-is ☐
Work Order Update ☐

AGAINST DEPARTMENT/PROCESS

Skid-tube ☐ Crosstube ☐ Water Jet ☐ Engineering ☐
Machining ☐ Small Fab ☐ Prod. Eng. Coor. ☐ Quality ☐
Thermoforming ☐ Finishing ☐ Rec/Store/Packaging ☐ Other ☐
Large Fab ☐ Composite ☐ Supplier ☐ ☐

Root Cause		Date	Step	Qty	Description of work order update or Non-conformance	Initial Chief Eng	Action Description	Sign & Date	Verification	QC Inspector
Doc/Data	☐									
Equip/Tooling	☐									
Operator	☐									
Material	☐									
Setup	☐									
Other	☐									
Process	☐									
Supplier	☐									
Training	☐									
Unapproved	☐									

FAULT CATEGORY

Landing Gear

☐ Bending
☐ Centre Not Concentric to O/S
☐ Cracks
☐ Crushed/Crimped
☐ Cuffs
☐ Heat Treat
☐ Inspection Strip in Tube
☐ Ripples in Bend
☐ Torque Waves in Extrusion
☐ Turning Sequence
☐ Wave/Twist in Tube

General

☐ Bend
☐ BOM/Route
☐ Broken/Damaged
☐ Burrs
☐ Contamination
☐ Countersink
☐ Cut Too Short
☐ Drill Holes
☐ Drawing
☐ Finish
☐ Folio

☐ Grain
☐ Hardware
☐ Inspection Incomplete
☐ Instructions Incomplete/Unclear
☐ Maintenance
☐ Mislabeled
☐ Misread
☐ Offset
☐ Out of Calibration
☐ Out of Sequence
☐ Outside Dimensions

☐ Ovalized
☐ Over/Under tolerance
☐ Part Incorrect
☐ Part Lost/Missing
☐ Part Moved
☐ Positioned Wrong
☐ Power Loss/Surge

☐ Pressure/Forced
☐ Temperature/Cure
☐ Weld
☐ Wrong Stock Pulled

☐ Other

_____
_____
_____

Item ID: D3562-042 **Accept** *N900040100* **Setup Start** *NS1*
Revision ID: **Stop** *NS2*
Item Name: Step Weldment

Start Date: 10/17/13 **Start Qty:** 2.00 *2* **Cust Item ID:**
Required Date: 10/17/13 **Req'd Qty:** 2.00 *2* **Customer:**
Reference:

Approvals: **Process Plan:** _____ **Date:** _____ **Tooling:** _____ **Date:** _____ **Run Start** *NR1*
QC: _____ **Date:** _____ **SPC (Y/N):** _____ **Date:** _____ **Stop** *NR2*

Sequence ID/ Work Center ID	Operation Description	Set Up/ Run Hours	Tool ID	Tool #	Plan Code	Accept Qty	Reject Qty	Reject Number	Insp. Stamp
130	QC3- Inspect Part Finish	0.00				2	ϕ		DAS 19 9-8 14.01.08
130									
QC	**Memo**	0.00							
Quality Control									
140		0.00				2	ϕ		14.01.08
140	Small Fab								
Small Fab	**Memo**	0.00							
Small Fab	1- Transfer drill Rivet holes as per dwg D3562.								
	2-Touch-up rivet holes with alodine as per dwg d3562								
	3-Rivet legs using Scotch-Weld as per dwg D3562.								
	******Ensure to wipe off any exess magnobond ******								
	A/R Scotch-Weld DP460 Batch: 126005 EXP DATE: 14.05.01								

DQA: _____ Date: _____

NCR: Yes / No

WORK ORDER NON-CONFORMANCE / UPDATE

QA Closed: Date:

Work Order: _____

Part No. _____

NCR No. _____

DISPOSITION

- Rework ☐
- Scrap ☐
- Use-as-is ☐
- Work Order Update ☐

AGAINST DEPARTMENT/PROCESS

- Skid-tube ☐
- Machining ☐
- Thermoforming ☐
- Large Fab ☐
- Crosstube ☐
- Small Fab ☐
- Finishing ☐
- Composite ☐
- Water Jet ☐
- Prod. Eng. Coor. ☐
- Rec/Store/Packaging ☐
- Supplier ☐
- Engineering ☐
- Quality ☐
- Other ☐

Root Cause		Date	Step	Qty	Description of work order update or Non-conformance	Initial Chief Eng	Action Description	Sign & Date	Verification	QC Inspector
Doc/Data	☐									
Equip/Tooling	☐									
Operator	☐									
Material	☐									
Setup	☐									
Other	☐									
Process	☐									
Supplier	☐									
Training	☐									
Unapproved	☐									

FAULT CATEGORY

Landing Gear

- ☐ Bending
- ☐ Centre Not Concentric to O/S
- ☐ Cracks
- ☐ Crushed/Crimped
- ☐ Cuffs
- ☐ Heat Treat
- ☐ Inspection Strip in Tube
- ☐ Ripples in Bend
- ☐ Torque Waves in Extrusion
- ☐ Turning Sequence
- ☐ Wave/Twist in Tube

General

- ☐ Bend
- ☐ BOM/Route
- ☐ Broken/Damaged
- ☐ Burrs
- ☐ Contamination
- ☐ Countersink
- ☐ Cut Too Short
- ☐ Drill Holes
- ☐ Drawing
- ☐ Finish
- ☐ Folio
- ☐ Grain
- ☐ Hardware
- ☐ Inspection Incomplete
- ☐ Instructions Incomplete/Unclear
- ☐ Maintenance
- ☐ Mislabeled
- ☐ Misread
- ☐ Offset
- ☐ Out of Calibration
- ☐ Out of Sequence
- ☐ Outside Dimensions
- ☐ Ovalized
- ☐ Over/Under tolerance
- ☐ Part Incorrect
- ☐ Part Lost/Missing
- ☐ Part Moved
- ☐ Positioned Wrong
- ☐ Power Loss/Surge
- ☐ Pressure/Forced
- ☐ Temperature/Cure
- ☐ Weld
- ☐ Wrong Stock Pulled
- ☐ Other

_____

_____

_____

Item ID: D3562-042 **Accept** *N900040100* **Setup Start** *NS1*
Revision ID: **Stop** *NS2*
Item Name: Step Weldment

Start Date: 10/17/13 **Start Qty:** 2.00 *2*
Required Date: 10/17/13 **Req'd Qty:** 2.00 *2*
Reference:

Cust Item ID:
Customer:

Run Start *NR1*
Stop *NR2*

Approvals: **Process Plan:** _____ **Date:** _____ **Tooling:** _____ **Date:** _____
QC: _____ **Date:** _____ **SPC (Y/N):** _____ **Date:** _____

Sequence ID/ Work Center ID	Operation Description	Set Up/ Run Hours	Tool ID	Tool #	Plan Code	Accept Qty	Reject Qty	Reject Number	Insp. Stamp
150	QC5- Inspect part completeness to step on W/O	0.00				(2)	14-01-09		DAS 9 9-89
150									
QC	**Memo**	0.00							
Quality Control									
160		0.00							
160	Large Fab					2			
Large Fab	**Memo**	0.00							15 01-10
Large Fab	1-Weld end caps as per Dwg D3562& QSI 004. Inspect for foreign objects as per QSI 024. A/RAluminum Rod 123928 2-Grind end cap welds flush as per Dwg D3562								
170	QC10- Inspect visual per QSI004- ground welds	0.00							DAS 27 9-89
170						2			
QC	**Memo**	0.00							4/1/10
Quality Control									

DQA: _____ Date: _____

NCR: Yes / No

WORK ORDER NON-CONFORMANCE / UPDATE

QA Closed: Date:

Work Order: _____

Part No. _____

NCR No. _____

DISPOSITION

- Rework ☐
- Scrap ☐
- Use-as-is ☐
- Work Order Update ☐

AGAINST DEPARTMENT/PROCESS

- Skid-tube ☐
- Machining ☐
- Thermoforming ☐
- Large Fab ☐
- Crosstube ☐
- Small Fab ☐
- Finishing ☐
- Composite ☐
- Water Jet ☐
- Prod. Eng. Coor. ☐
- Rec/Store/Packaging ☐
- Supplier ☐
- Engineering ☐
- Quality ☐
- Other ☐

Root Cause		Date	Step	Qty	Description of work order update or Non-conformance	Initial Chief Eng	Action Description	Sign & Date	Verification	QC Inspector
Doc/Data	☐									
Equip/Tooling	☐									
Operator	☐									
Material	☐									
Setup	☐									
Other	☐									
Process	☐									
Supplier	☐									
Training	☐									
Unapproved	☐									

FAULT CATEGORY

Landing Gear

- ☐ Bending
- ☐ Centre Not Concentric to O/S
- ☐ Cracks
- ☐ Crushed/Crimped
- ☐ Cuffs
- ☐ Heat Treat
- ☐ Inspection Strip in Tube
- ☐ Ripples in Bend
- ☐ Torque Waves in Extrusion
- ☐ Turning Sequence
- ☐ Wave/Twist in Tube

General

- ☐ Bend
- ☐ BOM/Route
- ☐ Broken/Damaged
- ☐ Burrs
- ☐ Contamination
- ☐ Countersink
- ☐ Cut Too Short
- ☐ Drill Holes
- ☐ Drawing
- ☐ Finish
- ☐ Folio
- ☐ Grain
- ☐ Hardware
- ☐ Inspection Incomplete
- ☐ Instructions Incomplete/Unclear
- ☐ Maintenance
- ☐ Mislabeled
- ☐ Misread
- ☐ Offset
- ☐ Out of Calibration
- ☐ Out of Sequence
- ☐ Outside Dimensions
- ☐ Ovalized
- ☐ Over/Under tolerance
- ☐ Part Incorrect
- ☐ Part Lost/Missing
- ☐ Part Moved
- ☐ Positioned Wrong
- ☐ Power Loss/Surge
- ☐ Pressure/Forced
- ☐ Temperature/Cure
- ☐ Weld
- ☐ Wrong Stock Pulled
- ☐ Other

_____

_____

_____

Item ID: D3562-042 **Accept** *N900040100* **Setup Start** *NS1*
Revision ID: **Stop** *NS2*
Item Name: Step Weldment
Start Date: 10/17/13 **Start Qty:** 2.00 *2* **Cust Item ID:**
Required Date: 10/17/13 **Req'd Qty:** 2.00 *2* **Customer:**
Reference:

Approvals: **Process Plan:** _____ **Date:** _____ **Tooling:** _____ **Date:** _____ **Run Start** *NR1*
QC: _____ **Date:** _____ **SPC (Y/N):** _____ **Date:** _____ **Stop** *NR2*

Sequence ID/ Work Center ID	Operation Description	Set Up/ Run Hours	Tool ID	Tool #	Plan Code	Accept Qty	Reject Qty	Reject Number	Insp. Stamp
180	QC5- Inspect part completeness to step on W/O	0.00				2			DAS 27 9-89
180									
QC	**Memo**	0.00							
Quality Control	14/11/10								
190	Chemical Conversion Coat per QSI005 4.1	0.00				2	MG	14-1-13	
190									
HandFinish	**Memo**	0.00							
Hand Finishing									
200	White Gloss(Ref:4.3.5.1) per QSI005 4.3-Alum	0.00				2	0	14-1-13.	DAS 34 9-89
200	M12689.								
Powdercoat	**Memo**	0.00							
Powder Coating	START TIME: 10:35 OVEN TEMPERATURE: 390° FINISH TIME: 11:05.								

DQA: _____ Date: _____

NCR: Yes / No

WORK ORDER NON-CONFORMANCE / UPDATE

QA Closed: Date:

Work Order: _____

Part No. _____

NCR No. _____

DISPOSITION

- Rework ☐
- Scrap ☐
- Use-as-is ☐
- Work Order Update ☐

AGAINST DEPARTMENT/PROCESS

- Skid-tube ☐
- Machining ☐
- Thermoforming ☐
- Large Fab ☐
- Crosstube ☐
- Small Fab ☐
- Finishing ☐
- Composite ☐
- Water Jet ☐
- Prod. Eng. Coor. ☐
- Rec/Store/Packaging ☐
- Supplier ☐
- Engineering ☐
- Quality ☐
- Other ☐

Root Cause		Date	Step	Qty	Description of work order update or Non-conformance	Initial Chief Eng	Action Description	Sign & Date	Verification	QC Inspector
Doc/Data	☐									
Equip/Tooling	☐									
Operator	☐									
Material	☐									
Setup	☐									
Other	☐									
Process	☐									
Supplier	☐									
Training	☐									
Unapproved	☐									

FAULT CATEGORY

Landing Gear

- ☐ Bending
- ☐ Centre Not Concentric to O/S
- ☐ Cracks
- ☐ Crushed/Crimped
- ☐ Cuffs
- ☐ Heat Treat
- ☐ Inspection Strip in Tube
- ☐ Ripples in Bend
- ☐ Torque Waves in Extrusion
- ☐ Turning Sequence
- ☐ Wave/Twist in Tube

General

- ☐ Bend
- ☐ BOM/Route
- ☐ Broken/Damaged
- ☐ Burrs
- ☐ Contamination
- ☐ Countersink
- ☐ Cut Too Short
- ☐ Drill Holes
- ☐ Drawing
- ☐ Finish
- ☐ Folio
- ☐ Grain
- ☐ Hardware
- ☐ Inspection Incomplete
- ☐ Instructions Incomplete/Unclear
- ☐ Maintenance
- ☐ Mislabeled
- ☐ Misread
- ☐ Offset
- ☐ Out of Calibration
- ☐ Out of Sequence
- ☐ Outside Dimensions
- ☐ Ovalized
- ☐ Over/Under tolerance
- ☐ Part Incorrect
- ☐ Part Lost/Missing
- ☐ Part Moved
- ☐ Positioned Wrong
- ☐ Power Loss/Surge
- ☐ Pressure/Forced
- ☐ Temperature/Cure
- ☐ Weld
- ☐ Wrong Stock Pulled
- ☐ Other

_____

_____

_____

Work Order ID 108386 *108386*

October-17-13 1:23:31 PM

Item ID: D3562-042 **Accept** *N900040100* **Setup Start** *NS1*

Revision ID: **Stop** *NS2*

Item Name: Step Weldment

Start Date: 10/17/13 **Start Qty:** 2.00 *2* **Cust Item ID:**

Required Date: 10/17/13 **Req'd Qty:** 2.00 *2* **Customer:**

Reference:

Run Start *NR1*

Approvals: **Process Plan:** _____ **Date:** _____ **Tooling:** _____ **Date:** _____

QC: _____ **Date:** _____ **SPC (Y/N):** _____ **Date:** _____ **Stop** *NR2*

Sequence ID/ Work Center ID	Operation Description	Set Up/ Run Hours	Tool ID	Tool #	Plan Code	Accept Qty	Reject Qty	Reject Number	Insp. Stamp
210 *210* HandFinish Hand Finishing	Wing Walk as per dwg QSI005 4.4 Batch 1M127 0625	0.00				2x	0	Ml	10/01/14
	Memo	0.00							
220 *220* QC Quality Control	QC3- Inspect Part Finish	0.00				2x			14/01/15
	Memo	0.00							
230 *230* Packaging Packaging	Identify as per dwg & Stock Location GA	0.00				2x			14/01/15
	Memo w/o 105450	0.00							

DAS 36 9-89

DAS 36 9-89

DQA: _____ Date: _____

NCR: Yes / No

WORK ORDER NON-CONFORMANCE / UPDATE

QA Closed: Date:

Work Order: _____

Part No. _____

NCR No. _____

DISPOSITION

- Rework ☐
- Scrap ☐
- Use-as-is ☐
- Work Order Update ☐

AGAINST DEPARTMENT/PROCESS

- Skid-tube ☐
- Machining ☐
- Thermoforming ☐
- Large Fab ☐
- Crosstube ☐
- Small Fab ☐
- Finishing ☐
- Composite ☐
- Water Jet ☐
- Prod. Eng. Coor. ☐
- Rec/Store/Packaging ☐
- Supplier ☐
- Engineering ☐
- Quality ☐
- Other ☐

Root Cause		Date	Step	Qty	Description of work order update or Non-conformance	Initial Chief Eng	Action Description	Sign & Date	Verification	QC Inspector
Doc/Data	☐									
Equip/Tooling	☐									
Operator	☐									
Material	☐									
Setup	☐									
Other	☐									
Process	☐									
Supplier	☐									
Training	☐									
Unapproved	☐									

FAULT CATEGORY

Landing Gear

- ☐ Bending
- ☐ Centre Not Concentric to O/S
- ☐ Cracks
- ☐ Crushed/Crimped
- ☐ Cuffs
- ☐ Heat Treat
- ☐ Inspection Strip in Tube
- ☐ Ripples in Bend
- ☐ Torque Waves in Extrusion
- ☐ Turning Sequence
- ☐ Wave/Twist in Tube

General

- ☐ Bend
- ☐ BOM/Route
- ☐ Broken/Damaged
- ☐ Burrs
- ☐ Contamination
- ☐ Countersink
- ☐ Cut Too Short
- ☐ Drill Holes
- ☐ Drawing
- ☐ Finish
- ☐ Folio
- ☐ Grain
- ☐ Hardware
- ☐ Inspection Incomplete
- ☐ Instructions Incomplete/Unclear
- ☐ Maintenance
- ☐ Mislabeled
- ☐ Misread
- ☐ Offset
- ☐ Out of Calibration
- ☐ Out of Sequence
- ☐ Outside Dimensions
- ☐ Ovalized
- ☐ Over/Under tolerance
- ☐ Part Incorrect
- ☐ Part Lost/Missing
- ☐ Part Moved
- ☐ Positioned Wrong
- ☐ Power Loss/Surge
- ☐ Pressure/Forced
- ☐ Temperature/Cure
- ☐ Weld
- ☐ Wrong Stock Pulled
- ☐ Other _____

Item ID: D3562-042 **Accept** *N900040100* **Setup Start** *NS1*
Revision ID: **Stop** *NS2*
Item Name: Step Weldment
Start Date: 10/17/13 **Start Qty:** 2.00 *2* **Cust Item ID:**
Required Date: 10/17/13 **Req'd Qty:** 2.00 *2* **Customer:**
Reference:

Run Start *NR1*
Stop *NR2*

Approvals: **Process Plan:** _____ **Date:** _____ **Tooling:** _____ **Date:** _____
QC: _____ **Date:** _____ **SPC (Y/N):** _____ **Date:** _____

Sequence ID/ Work Center ID	Operation Description	Set Up/ Run Hours	Tool ID	Tool #	Plan Code	Accept Qty	Reject Qty	Reject Number	Insp. Stamp
240	QC21- Final Inspection - Work Order Release	0.00							
240									
QC	**Memo**	0.00							
Quality Control									

14-01-16

14-01-15

DQA: _____ Date: _____

NCR: Yes / No

WORK ORDER NON-CONFORMANCE / UPDATE

QA Closed: Date:

Work Order: _____

Part No. _____

NCR No. _____

DISPOSITION

- Rework ☐
- Scrap ☐
- Use-as-is ☐
- Work Order Update ☐

AGAINST DEPARTMENT/PROCESS

- Skid-tube ☐
- Machining ☐
- Thermoforming ☐
- Large Fab ☐
- Crosstube ☐
- Small Fab ☐
- Finishing ☐
- Composite ☐
- Water Jet ☐
- Prod. Eng. Coor. ☐
- Rec/Store/Packaging ☐
- Supplier ☐
- Engineering ☐
- Quality ☐
- Other ☐

Root Cause		Date	Step	Qty	Description of work order update or Non-conformance	Initial Chief Eng	Action Description	Sign & Date	Verification	QC Inspector
Doc/Data	☐									
Equip/Tooling	☐									
Operator	☐									
Material	☐									
Setup	☐									
Other	☐									
Process	☐									
Supplier	☐									
Training	☐									
Unapproved	☐									

FAULT CATEGORY

Landing Gear

- ☐ Bending
- ☐ Centre Not Concentric to O/S
- ☐ Cracks
- ☐ Crushed/Crimped
- ☐ Cuffs
- ☐ Heat Treat
- ☐ Inspection Strip in Tube
- ☐ Ripples in Bend
- ☐ Torque Waves in Extrusion
- ☐ Turning Sequence
- ☐ Wave/Twist in Tube

General

- ☐ Bend
- ☐ BOM/Route
- ☐ Broken/Damaged
- ☐ Burrs
- ☐ Contamination
- ☐ Countersink
- ☐ Cut Too Short
- ☐ Drill Holes
- ☐ Drawing
- ☐ Finish
- ☐ Folio
- ☐ Grain
- ☐ Hardware
- ☐ Inspection Incomplete
- ☐ Instructions Incomplete/Unclear
- ☐ Maintenance
- ☐ Mislabeled
- ☐ Misread
- ☐ Offset
- ☐ Out of Calibration
- ☐ Out of Sequence
- ☐ Outside Dimensions
- ☐ Ovalized
- ☐ Over/Under tolerance
- ☐ Part Incorrect
- ☐ Part Lost/Missing
- ☐ Part Moved
- ☐ Positioned Wrong
- ☐ Power Loss/Surge
- ☐ Pressure/Forced
- ☐ Temperature/Cure
- ☐ Weld
- ☐ Wrong Stock Pulled
- ☐ Other

_____

_____

_____

Picklist Print

October-17-13 1:23:31 PM

Work Order ID: 108386

Parent Item: D3562-042 **Start Date:** 10/17/13 **Required Date:** 10/17/13

Parent Item Name: Step Weldment **Start Qty:** 2.00 **Required Qty:** 2.00

Comments: IPP Rev:A New Issue 06-11-09 JLM
IPP rev B ECN 987 07.10.09 EC verified by: DD
IPP Rev:C ECN1048 07-12-18 DD verified by: EC
IPP Rev:D 08-07-28 add chemical conversion coat DD verf:EC IPP REV:E 13.06.03 PER DWG REV.F DD VERF:JLM

Component Item ID/ Item Name	Replacement Item ID	Mfg/ Purch	Bin Item	Primary Location	Last Location	Route Seq ID	Unit of Measure	Qty on Hand	Qty per Kit	Total Qty	Qty Issued	Date Issued	Status
D2622-120C Step Extrusion		Manufactured	No			100	Each	209.4700	1	2		13.11.27	
				Location		**Loc Qty**		**Loc Code**					
				HALL		123							
				105575		123			2				
				WA003		86.47							
				101765		74							
				81507		4							
				89750		7.87							
				98024		0.6							
D2734 Step End Plate		Manufactured	No			140	Each	212.0000	2	4		14.01.10	
				Location		**Loc Qty**		**Loc Code**					
				WA003		212							
				102618		40							
				105712		150			4				
				80682		6							
				84563		10							
				91761		6							
D3560-042 Arm Weldment		Manufactured	No	B108072=1 B108465=1		140	Each	0.0000	1	2		14.01.08	
D3560-044 Arm Weldment		Manufactured	No	B108137=1 B106939=1		140	Each	0.0000	1	2		14.01.08	

DQA: _____ Date: _____

NCR: Yes / No

WORK ORDER NON-CONFORMANCE / UPDATE

QA Closed: Date:

Work Order: _____

Part No. _____

NCR No. _____

DISPOSITION

- Rework ☐
- Scrap ☐
- Use-as-is ☐
- Work Order Update ☐

AGAINST DEPARTMENT/PROCESS

- Skid-tube ☐
- Machining ☐
- Thermoforming ☐
- Large Fab ☐
- Crosstube ☐
- Small Fab ☐
- Finishing ☐
- Composite ☐
- Water Jet ☐
- Prod. Eng. Coor. ☐
- Rec/Store/Packaging ☐
- Supplier ☐
- Engineering ☐
- Quality ☐
- Other ☐

Root Cause		Date	Step	Qty	Description of work order update or Non-conformance	Initial Chief Eng	Action Description	Sign & Date	Verification	QC Inspector
Doc/Data	☐									
Equip/Tooling	☐									
Operator	☐									
Material	☐									
Setup	☐									
Other	☐									
Process	☐									
Supplier	☐									
Training	☐									
Unapproved	☐									

FAULT CATEGORY

Landing Gear

- ☐ Bending
- ☐ Centre Not Concentric to O/S
- ☐ Cracks
- ☐ Crushed/Crimped
- ☐ Cuffs
- ☐ Heat Treat
- ☐ Inspection Strip in Tube
- ☐ Ripples in Bend
- ☐ Torque Waves in Extrusion
- ☐ Turning Sequence
- ☐ Wave/Twist in Tube

General

- ☐ Bend
- ☐ BOM/Route
- ☐ Broken/Damaged
- ☐ Burrs
- ☐ Contamination
- ☐ Countersink
- ☐ Cut Too Short
- ☐ Drill Holes
- ☐ Drawing
- ☐ Finish
- ☐ Folio
- ☐ Grain
- ☐ Hardware
- ☐ Inspection Incomplete
- ☐ Instructions Incomplete/Unclear
- ☐ Maintenance
- ☐ Mislabeled
- ☐ Misread
- ☐ Offset
- ☐ Out of Calibration
- ☐ Out of Sequence
- ☐ Outside Dimensions
- ☐ Ovalized
- ☐ Over/Under tolerance
- ☐ Part Incorrect
- ☐ Part Lost/Missing
- ☐ Part Moved
- ☐ Positioned Wrong
- ☐ Power Loss/Surge
- ☐ Pressure/Forced
- ☐ Temperature/Cure
- ☐ Weld
- ☐ Wrong Stock Pulled
- ☐ Other _____

Picklist Print

October-17-13 1:23:31 PM

Work Order ID: **108386**

Parent Item: **D3562-042** **Start Date:** 10/17/13 **Required Date:** 10/17/13

Parent Item Name: Step Weldment **Start Qty:** 2.00 **Required Qty:** 2.00

MS20600-AD4W5 Blind Rivet	Purchased	No		160	Each	764.0000	**32**	**64**	14-01-08

Location	Loc Qty	Loc Code	
ST311	764		
125654	340		
m125709	424		64

DQA: _____ Date: _____

NCR: Yes / No

WORK ORDER NON-CONFORMANCE / UPDATE

QA Closed: Date:

Work Order: _____

Part No. _____

NCR No. _____

DISPOSITION

- Rework ☐
- Scrap ☐
- Use-as-is ☐
- Work Order Update ☐

AGAINST DEPARTMENT/PROCESS

- Skid-tube ☐
- Machining ☐
- Thermoforming ☐
- Large Fab ☐
- Crosstube ☐
- Small Fab ☐
- Finishing ☐
- Composite ☐
- Water Jet ☐
- Prod. Eng. Coor. ☐
- Rec/Store/Packaging ☐
- Supplier ☐
- Engineering ☐
- Quality ☐
- Other ☐

Root Cause		Date	Step	Qty	Description of work order update or Non-conformance	Initial Chief Eng	Action Description	Sign & Date	Verification	QC Inspector
Doc/Data	☐									
Equip/Tooling	☐									
Operator	☐									
Material	☐									
Setup	☐									
Other	☐									
Process	☐									
Supplier	☐									
Training	☐									
Unapproved	☐									

FAULT CATEGORY

Landing Gear

- ☐ Bending
- ☐ Centre Not Concentric to O/S
- ☐ Cracks
- ☐ Crushed/Crimped
- ☐ Cuffs
- ☐ Heat Treat
- ☐ Inspection Strip in Tube
- ☐ Ripples in Bend
- ☐ Torque Waves in Extrusion
- ☐ Turning Sequence
- ☐ Wave/Twist in Tube

General

- ☐ Bend
- ☐ BOM/Route
- ☐ Broken/Damaged
- ☐ Burrs
- ☐ Contamination
- ☐ Countersink
- ☐ Cut Too Short
- ☐ Drill Holes
- ☐ Drawing
- ☐ Finish
- ☐ Folio
- ☐ Grain
- ☐ Hardware
- ☐ Inspection Incomplete
- ☐ Instructions Incomplete/Unclear
- ☐ Maintenance
- ☐ Mislabeled
- ☐ Misread
- ☐ Offset
- ☐ Out of Calibration
- ☐ Out of Sequence
- ☐ Outside Dimensions
- ☐ Ovalized
- ☐ Over/Under tolerance
- ☐ Part Incorrect
- ☐ Part Lost/Missing
- ☐ Part Moved
- ☐ Positioned Wrong
- ☐ Power Loss/Surge
- ☐ Pressure/Forced
- ☐ Temperature/Cure
- ☐ Weld
- ☐ Wrong Stock Pulled
- ☐ Other

_____

_____

_____

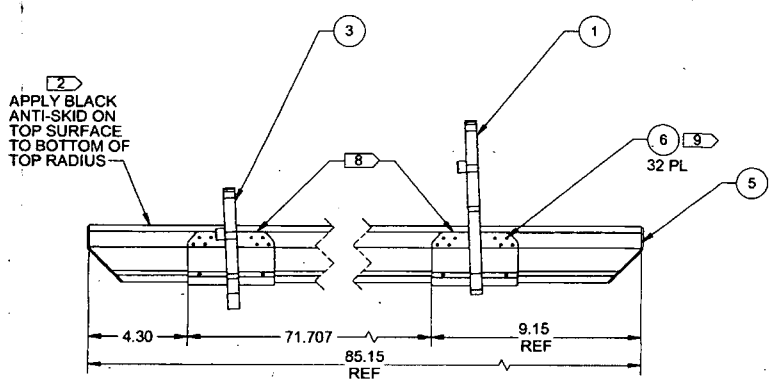

MEASURED BEFORE END CAPS WELDED IN PLACE

FWD

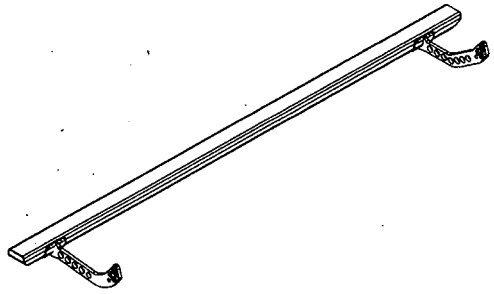

D3562-041 LH STEP ASSEMBLY

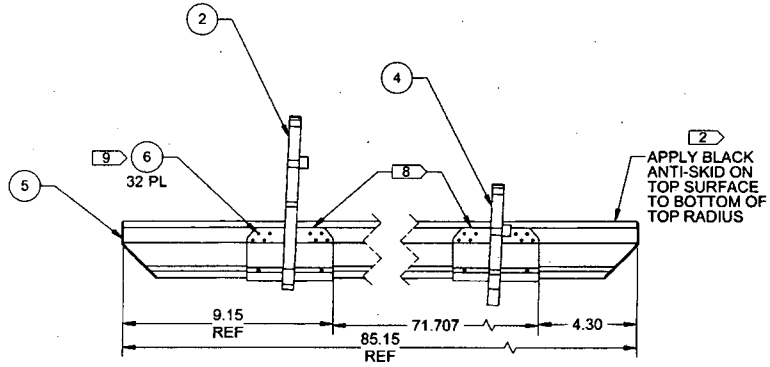

MEASURED BEFORE END CAPS WELDED IN PLACE

FWD

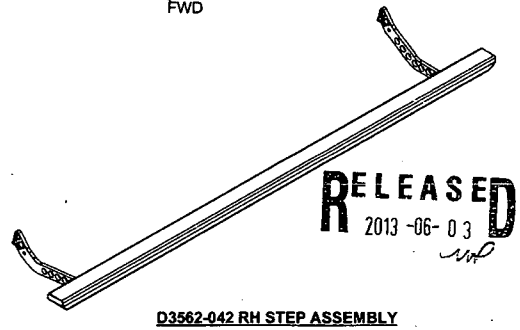

RELEASED
2013 -06- 03

D3562-042 RH STEP ASSEMBLY

NOTES:

1) MATERIAL: N/A
2) FINISH:
   i) POWDER COAT ASSEMBLY GLOSS WHITE (4.3.5.1) OR
   GREY SANDTEX (4.3.5.6) OR
   BLACK SANDTEX (4.3.5.7) OR
   GREEN SANDTEX (4.3.5.8) PER DART QSI 005 4.3
   ii) BLACK ANTI-SKID PAINT PER DART QSI 005 4.4
3) TOLERANCES: PER DART QSI 018 UNLESS OTHERWISE NOTED
4) UNITS: INCHES UNLESS OTHERWISE NOTED
5) BREAK SHARP EDGES: 0.005 TO 0.010 MAX
6) IDENTIFICATION: NONE
7) WEIGHT: 8.79 lbs
8) INSTALL ARM WELDMENTS WITH A LAYER OF SCOTCH-WELD DP460 BETWEEN THE ARM WELDMENT AND STEP EXTRUSION. FILL ANY TOOLING HOLES WITH SCOTCH-WELD DP460. CLEAN OFF EXCESS BEFORE POWDER COATING.
9) TRANSFER DRILL #30 DEBURR & TOUCH UP HOLES WITH CHEMICAL CONVERSION COAT BEFORE RIVETING

ITEM No.	QTY -041	QTY -042	P/N	DESCRIPTION
	X		D3562-041	LH STEP ASSEMBLY
		X	D3562-042	RH STEP ASSEMBLY
1	1		D3560-041	ARM WELDMENT
2		1	D3560-042	ARM WELDMENT
3	1		D3560-043	ARM WELDMENT
4		1	D3560-044	ARM WELDMENT
5	1	1	D3562-1	STEP ASSEMBLY
6	32	32	MS20600AD4W5	RIVET

REV.	DESCRIPTION	BY	DATE
F	REVISED NOTE 8 TO REMOVE MAGNOBOND, REPLACE WITH SCOTCH-WELD DP460, REF. PAR12-224. ADDED NOTE 9 AND SHEET 2	DW	13.05.15
E	ADD QTY(2) TO D2734 END PLATE ON D3562-042	PH	08.01.11
D	REMOVE D2808 SPACER NOTE; REDRAW IN SOLIDWORKS	DC	07.11.16
C	NOW MAGNOBOND, ADD D2808, REMOVE 4 RIVETS	CP	07.06.19
B	ARMS NOW RIVETED TO STEP	CP	07.01.15
A	NEW ISSUE	CP	06.09.26

DESIGN		DART AEROSPACE LTD
DRAWN	DW	HAWKESBURY, ONTARIO, CANADA
CHECKED		DRAWING NO. D3562 REV. F
MFG. APPR.		SHEET 1 OF 2
APPROVED		TITLE STEP ASSEMBLY SCALE NTS
DE APPR.		
DATE	13.05.15	

COPYRIGHT © 2006 BY DART AEROSPACE LTD
THIS DOCUMENT IS PRIVATE AND CONFIDENTIAL AND IS SUPPLIED ON THE EXPRESS CONDITION THAT IT IS NOT TO BE USED FOR ANY PURPOSE OR COPIED OR COMMUNICATED TO ANY OTHER PERSON WITHOUT WRITTEN PERMISSION FROM DART AEROSPACE LTD

108386 MLJ
13-10-27

108386

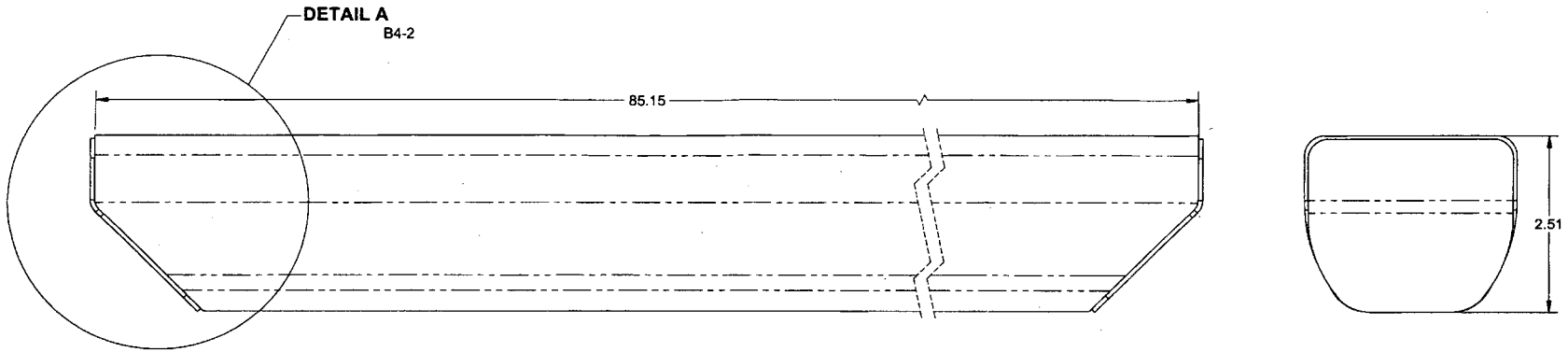

D3562-1 STEP ASSEMBLY

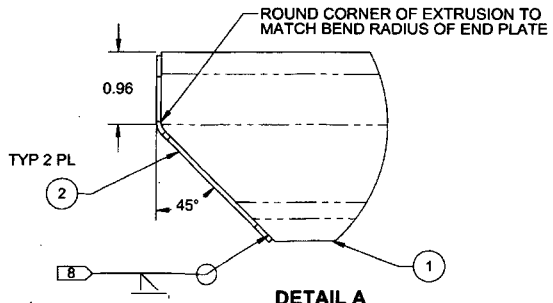

DETAIL A C7-2

TYP BOTH ENDS
SCALE 1X

RELEASED
2013 -06- 03

NOTES:

1) MATERIAL: N/A
2) FINISH: CHEMICAL CONVERSION COAT STEP EXTRUSION PER DART QSI 005 4.1 BEFORE ASSEMBLY
3) TOLERANCES: PER DART QSI 018 UNLESS OTHERWISE NOTED
4) UNITS: INCHES UNLESS OTHERWISE NOTED
5) BREAK SHARP EDGES: 0.005 TO 0.010 MAX
6) IDENTIFICATION: NONE
7) WEIGHT: 6.68 lbs
8) WELDING: ALL WELDS SHALL BE 100% VISUALLY INSPECTED BY A QUALIFIED INSPECTOR PER DART QSI 004

ITEM No.	QTY -1	P/N	DESCRIPTION
	X	D3562-1	STEP ASSEMBLY
1	A/R	D2622-XXX	STEP EXTRUSION
2	2	D2734	END PLATE

DESIGN	GP	DART AEROSPACE LTD HAWKESBURY, ONTARIO, CANADA
DRAWN	DW	
CHECKED	GP	DRAWING NO. D3562 REV. F
MFG. APPR.		SHEET 2 OF 2
APPROVED		TITLE STEP ASSEMBLY SCALE NTS
DE APPR.		
DATE	13.05.15	

COPYRIGHT © 2005 BY DART AEROSPACE LTD
THIS DOCUMENT IS PRIVATE AND CONFIDENTIAL AND IS SUPPLIED ON THE EXPRESS CONDITION THAT IT IS NOT TO BE USED FOR ANY PURPOSE OR COPIED OR COMMUNICATED TO ANY OTHER PE SON WITHOUT WRITTEN PERMISSION FROM DART AEROSPACE LTD